Gru a portale di alluminio
Aluminium gantry cranes

PORTA-GANTRY
Portata fino a 500 kg

PORTA-GANTRY
WLL up to 500 kg

CARATTERISTICHE
SPECIFICATION

Portable gantry system for liftting up to 500 kg or fall arrester protection up to 3 persons as EN 795/B and PD CEN/TS16415:2013 anchor system.

- Double capacity for lifting goods e persons:
  - Lifting goods up to 500 kg
  - Lifting persons up to 250 kg
- Fall arrester protection: up to 3 persons
- 360° swivel-locking castors as standard.
- Simple, manual height and span adjustment
- Corrosion resistant, anodized finish - easy to clean and suitable for cleanroom applications
- Flat packaging for transport and storage
- Norms: CE EN 795/B - 2006/42/EC PD CEN/TS16415:2013
- ATEX Zone 2 certification

Sistema portatile per il sollevamento fino a 500 kg oppure per sollevare e proteggere fino a 3 persone come ancoraggio EN 795/B e PD CEN/TS16415:2013.

- Doppia portata per sollevamento materiale e persone:
  - Sollevamento materiale fino a 500 kg
  - Sollevamento per persone fino a 250 kg
- Protezione contro le cadute dall'alto: fino a 3 persone
- Ruote girevoli a 360° bloccabili come standard per un facile posizionamento
- Semplice regolazione manuale in altezza e larghezza
- Imballo piatto per il trasporto e lo stoccaggio
- Resistente alla corrosione, finitura anodizzata - facile da pulire ed adatto per applicazioni in camera bianca
- Norme: CE EN 795/B - 2006/42/CE - PD CEN/TS16415:2013
- Certificazione ATEX Zona 2

ATEX ZONE 2

Portata WLL		Arresto caduta Fall arrester
Sollevamento materiale Goods lifting	**Sollevamento persone** Lifting persons	
kg	**kg**	**N° di persone** N° of persons
500	250	3

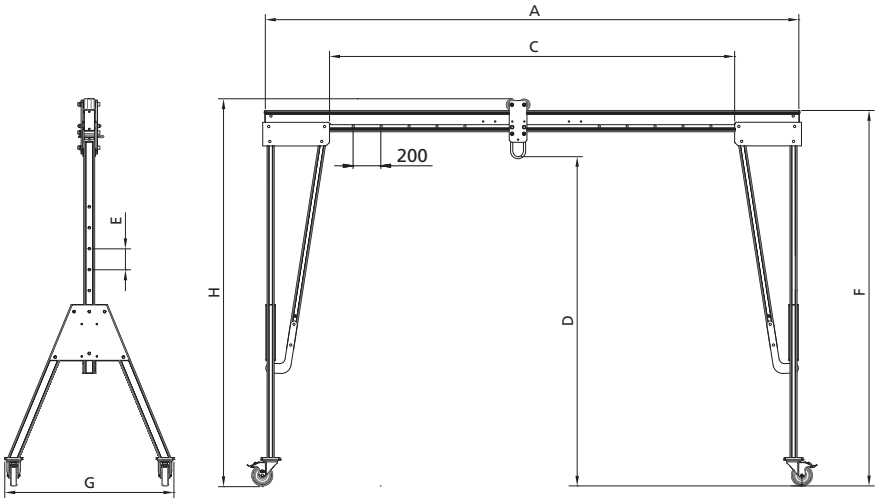

Rev. 03/2026

DATI TECNICI
TECHNICAL DATA

Manuale / Manual — Cricchetto / Ratchet

	Codice / Code	Altezza punto di attacco / Max height to lifting eye		Incremento altezza / Height increment		Altezza max. trave / Max height to top of beam	Altezza max. parte superiore carrello / Height to top of roller		Trave / Beam			Larghezza / Width	Peso spalla / Frame weight	Peso trave / Beam weight	Dimen. ruote Gantry / Gantry wheel dimensions	Dimen. ruote carrello superiore / Upper carriage wheel dimensions
		D max mm	D min mm	E mm		F max mm	H max mm	H min mm	A mm	C max mm	C min mm	G mm	kg	kg	mm	mm
D max = 2355 mm	PGSS00500S-2500A	2355	1605	5 x 150		2675	2757	2007	2500	1580	1180	1212	32	19	150	82
	PGSS00500S-3000A	2355	1605	5 x 150		2675	2757	2007	3000	2080	1680	1212	32	22	150	82
	PGSS00500S-3920A	2355	1605	5 x 150		2675	2757	2007	3920	3000	2200	1212	32	29	150	82
	PGSS00500S-4570A	2355	1605	5 x 150		2675	2757	2007	4570	3650	2050	1212	32	34	150	82
	PGSS00500S-5500A	2355	1605	5 x 150		2675	2757	2007	5500	4580	2980	1212	32	41	150	82
	PGSS00500S-6000A	2355	1605	5 x 150		2675	2757	2007	6000	5080	3480	1212	32	44	150	82
	PGSS00500S-9000A	2355	1605	5 x 150		2675	2757	2007	9000	8080	6480	1212	32	66	150	82
D max = 2851 mm	PGSS00500M-2500A	2851	2101	5 x 150		3171	3253	2503	2500	1580	1180	1429	42	19	150	82
	PGSS00500M-3000A	2851	2101	5 x 150		3171	3253	2503	3000	2080	1680	1429	42	22	150	82
	PGSS00500M-3920A	2851	2101	5 x 150		3171	3253	2503	3920	3000	2200	1429	42	29	150	82
	PGSS00500M-4570A	2851	2101	5 x 150		3171	3253	2503	4570	3650	2050	1429	42	34	150	82
	PGSS00500M-5500A	2851	2101	5 x 150		3171	3253	2503	5500	4580	2980	1429	42	41	150	82
	PGSS00500M-6000A	2851	2101	5 x 150		3171	3253	2503	6000	5080	3480	1429	42	44	150	82
	PGSS00500M-9000A	2851	2101	5 x 150		3171	3253	2503	9000	8080	6480	1429	42	66	150	82
D max = 3188 mm	PGSS00500I-2500A	3188	2188	5 x 200		3499	3581	2581	2500	1580	1180	1726	50	19	200	82
	PGSS00500I-3000A	3188	2188	5 x 200		3499	3581	2581	3000	2080	1680	1726	50	22	200	82
	PGSS00500I-3920A	3188	2188	5 x 200		3499	3581	2581	3920	3000	2200	1726	50	29	200	82
	PGSS00500I-4570A	3188	2188	5 x 200		3499	3581	2581	4570	3650	2050	1726	50	34	200	82
	PGSS00500I-6000A	3188	2188	5 x 200		3499	3581	2581	6000	4580	2980	1726	50	41	200	82
	PGSS00500I-7000A	3188	2188	5 x 200		3499	3581	2581	7000	5080	3480	1726	50	44	200	82
	PGSS00500I-9000A	3188	2188	5 x 200		3499	3581	2581	9000	8080	6480	1726	50	66	200	82
D max = 4079 mm	PGSS00500T-2500A	4079	2879	6 x 200		4399	4481	3281	2500	1580	1180	2011	56	19	200	82
	PGSS00500T-3000A	4079	2879	6 x 200		4399	4481	3281	3000	2080	1680	2011	56	22	200	82
	PGSS00500T-3920A	4079	2879	6 x 200		4399	4481	3281	3920	3000	2200	2011	56	29	200	82
	PGSS00500T-4570A	4079	2879	6 x 200		4399	4481	3281	4570	3650	2050	2011	56	34	200	82
	PGSS00500T-5500A	4079	2879	6 x 200		4399	4481	3281	5500	4580	2980	2011	56	41	200	82
	PGSS00500T-6000A	4079	2879	6 x 200		4399	4481	3281	6000	5080	3480	2011	56	44	200	82
	PGSS00500T-9000A	4079	2879	6 x 200		4399	4481	3281	9000	8080	6480	2011	56	66	200	82
D max = 4527 mm	PGSS00500TC4-2500A	4527	3327	6 x 200		4847	4930	3730	2500	1580	1180	2234	86	19	200	82
	PGSS00500TC4-3000A	4527	3327	6 x 200		4847	4930	3730	3000	2080	1680	2234	86	22	200	82
	PGSS00500TC4-3920A	4527	3327	6 x 200		4847	4930	3730	3920	3000	2200	2234	86	29	200	82
	PGSS00500TC4-4570A	4527	3327	6 x 200		4847	4930	3730	4570	3650	2050	2234	86	34	200	82
	PGSS00500TC4-5500A	4527	3327	6 x 200		4847	4930	3730	5500	4580	2980	2234	86	41	200	82
	PGSS00500TC4-6000A	4527	3327	6 x 200		4847	4930	3730	6000	5080	3480	2234	86	44	200	82
	PGSS00500TC4-9000A	4527	3327	6 x 200		4847	4930	3730	9000	8080	6480	2234	86	66	200	82
D max = 5027 mm	PGSS00500TC3-2500A	5027	3827	6 x 200		5347	5430	4230	2500	1580	1180	2557	91	19	200	82
	PGSS00500TC3-3000A	5027	3827	6 x 200		5347	5430	4230	3000	2080	1680	2557	91	22	200	82
	PGSS00500TC3-3920A	5027	3827	6 x 200		5347	5430	4230	3920	3000	2200	2557	91	29	200	82
	PGSS00500TC3-4570A	5027	3827	6 x 200		5347	5430	4230	4570	3650	2050	2557	91	34	200	82
	PGSS00500TC3-5500A	5027	3827	6 x 200		5347	5430	4230	5500	4580	2980	2557	91	41	200	82
	PGSS00500TC3-6000A	5027	3827	6 x 200		5347	5430	4230	6000	5080	3480	2557	91	44	200	82
	PGSS00500TC3-9000A	5027	3827	6 x 200		5347	5430	4230	9000	8080	6480	2557	91	66	200	82
D max = 5527 mm	PGSS00500TC2-2500A	5527	3927	8 x 200		5848	5930	4330	2500	1580	1180	2733	97	19	200	82
	PGSS00500TC2-3000A	5527	3927	8 x 200		5848	5930	4330	3000	2080	1680	2733	97	22	200	82
	PGSS00500TC2-3920A	5527	3927	8 x 200		5848	5930	4330	3920	3000	2200	2733	97	29	200	82
	PGSS00500TC2-4570A	5527	3927	8 x 200		5848	5930	4330	4570	3650	2050	2733	97	34	200	82
	PGSS00500TC2-5500A	5527	3927	8 x 200		5848	5930	4330	6000	4580	2980	2733	97	41	200	82
	PGSS00500TC2-6000A	5527	3927	8 x 200		5848	5930	4330	7000	5080	3480	2733	97	44	200	82
	PGSS00500TC2-9000A	5527	3927	8 x 200		5848	5930	4330	9000	8080	6480	2733	97	66	200	82
D max = 5829 mm	PGSS00500TC1-2500A	5829	4029	9 x 200		6149	6231	4431	2500	1580	1180	2733	102	19	200	82
	PGSS00500TC1-3000A	5829	4029	9 x 200		6149	6231	4431	3000	2080	1680	2733	102	22	200	82
	PGSS00500TC1-3920A	5829	4029	9 x 200		6149	6231	4431	3920	3000	2200	2733	102	29	200	82
	PGSS00500TC1-4570A	5829	4029	9 x 200		6149	6231	4431	4570	3650	2050	2733	102	34	200	82
	PGSS00500TC1-5500A	5829	4029	9 x 200		6149	6231	4431	5500	4580	2980	2733	102	41	200	82
	PGSS00500TC1-6000A	5829	4029	9 x 200		6149	6231	4431	6000	5080	3480	2733	102	44	200	82
	PGSS00500TC1-9000A	5829	4029	9 x 200		6149	6231	4431	9000	8080	6480	2733	102	66	200	82